图形点阵液晶显示模块使用手册

CM12864-2SLYB

广州市瑞通科技有限公司

广州新赛格电子城三楼Ｂ３３１３档
ＴＥＬ：０２０－８８４０３２６８
ＦＡＸ：０２０－８７５８０４８０
ｈｔｔｐ：ｗｗｗ．ｒｔｌｃｄ．ｃｏｍ
Ｅ－ｍａｉｌ：ｘｉｅｚｈｏｎｇ２@１６３．ｃｏｍ

图形点阵液晶显示模块使用手册

CM12864-2SLYB

概述

　　CM12864-2 是一种图形点阵液晶显示器,它主要由行驱动器/列驱动器及格 128×64 全点阵液晶显示器组成。可完成图形显示，也可以显示 8×4 个(16×16 点阵)汉字。

主要技术参数和性能：

1.电源：VDD：+5V； 模块内自带-10V 负压，用于 LCD 的驱动电压。

2.显示内容：128(列)×64(行)点

3.全屏幕点阵

4.七种指令

5.与 CPU 接口采用 8 位数据总线并行输入输出和 8 条控制线

6.占空比 1/64

7.工作温度：-10℃∽+55℃，存储温度：-20℃∽+70℃

8.显示模式：黄绿膜、灰膜、蓝膜、黑白膜

9.背光特性：LED 背光（黄绿色、蓝色、白色、红色）

10.模块封装方式：COB

11.视角方向：6:00

12.功耗：模块自带负压

二．外形尺寸图

1．外形尺寸图

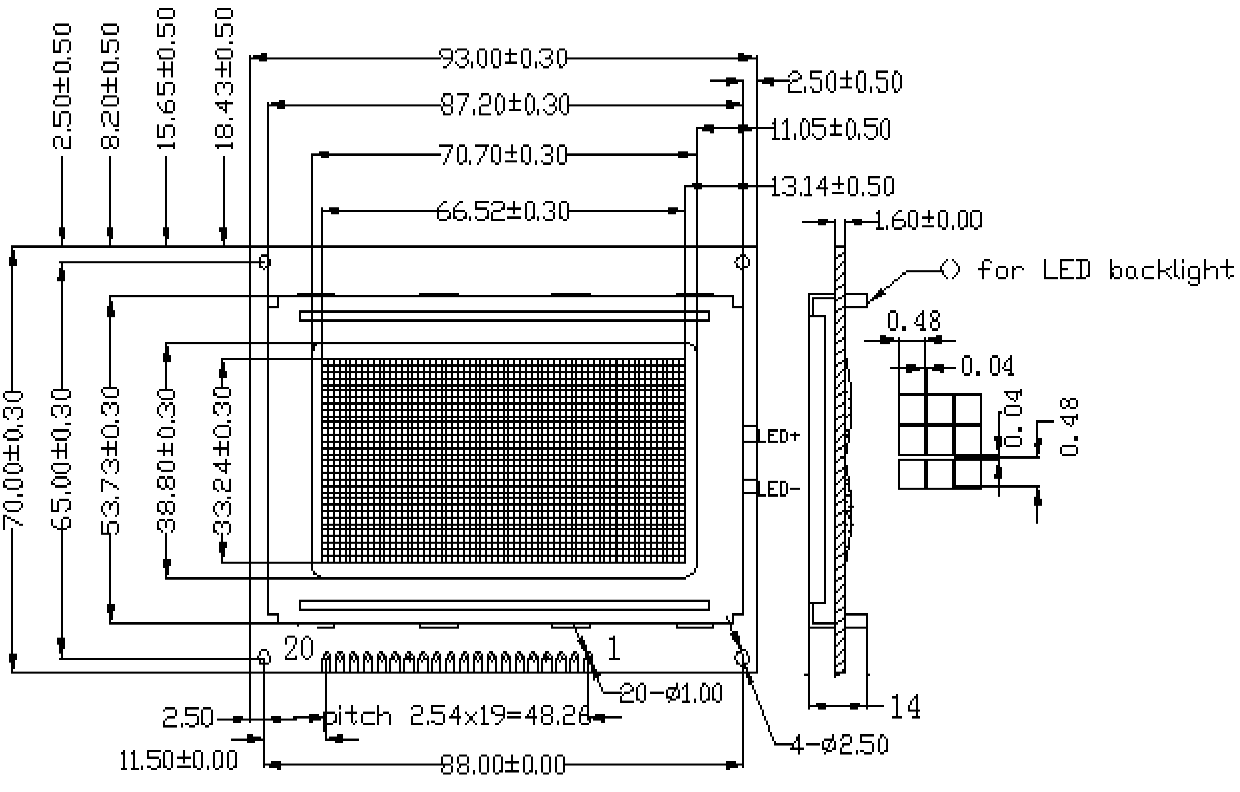

2. 外形尺寸

ITEM	NOMINAL DIMEN	UNIT
模块体积	93×70×9/14	mm
视域	70.8×38.8	mm
行列点阵数	128×64	dots
点距离	0.04×0.04	mm
点大小	0.48×0.48	mm

三. 模块主要硬件构成说明 (结构框图)

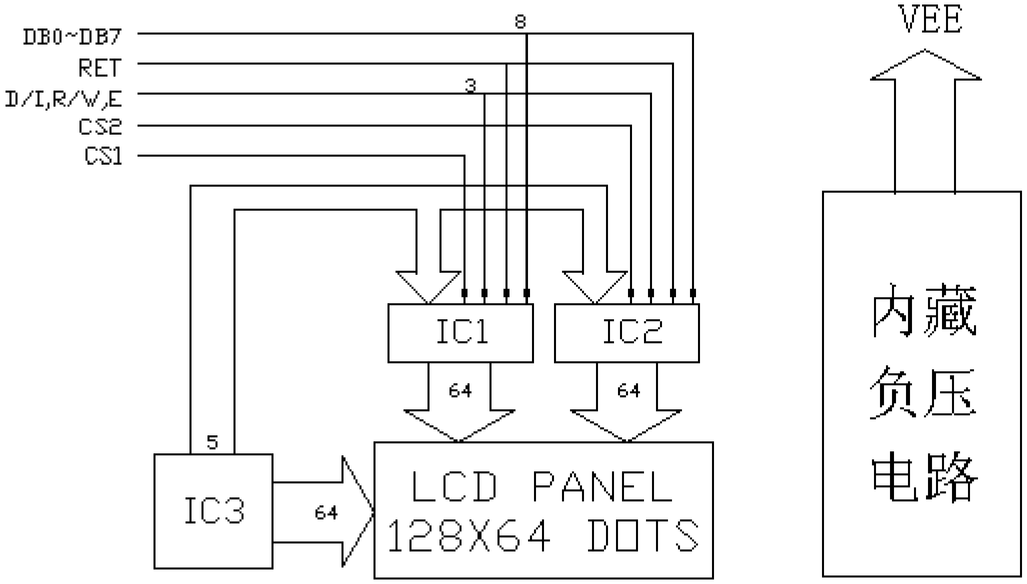

注：IC2 控制模块的左半屏，IC1 控制模块的右半屏

IC3 为行驱动器。IC1，IC2 为列驱动器。IC1，IC2，IC3 含有以下主要功能器件。了解如下器件有利于对 LCD 模块之编程。

LCD 模块之编程.

1.指令寄存器(IR)

IR 是用来寄存指令码,与数据寄存器寄存数据相对应.当 D/I=1 时,在 E 信号下降沿的作用下,指令码写入 IR.

2.数据寄存器(DR)

DR 是用来寄存数据的,与指令寄存器寄存指令相对应.当 D/I=1 时,在 E 信号的下降沿作用下,图形显示数据写入 DR,或在 E 信号高电平作用下由 DR 读到 DB7~DB0 数据总线.DR 和 DDRAM 之间的数据传输是模块内部自动执行的.

3.忙标志:BF

BF 标志提供内部工作情况.BF=1 表示模块在进行内部操作,此时模块不接受外部指令和数据.BF=0 时,模块为准备状态,随时可接受外部指令和数据.

利用 STATUS READ 指令,可以将 BF 读到 DB7 总线,从而检验模块之工作状态.

4.显示控制触发器 DFF

此触发器是用于模块屏幕显示开和关的控制。DFF=1 为开显示（DISPLAY ON),DDRAM 的内容就显示在屏幕上，DDF=0 为关显示（DISPLAY OFF)。

DDF 的状态是指令 DISPLAY ON/OFF 和 RST 信号控制的。

5.XY 地址计数器

XY 地址计数器是一个 9 位计数器。高三位是 X 地址计数器，低 6 位为 Y 地址计数器,XY 地址计数器实际上是作为 DDRAM 的地址指针,X 地址计数器为 DDRAM 的页指针，Y 地址计数器为 DDRAM 的 Y 地址指针。

X 地址计数器是没有记数功能的，只能用指令设置。

Y 地址计数器具有循环记数功能，各显示数据写入后，Y 地址自动加 1，Y 地址指针从 0 到 63。

6.显示数据 RAM(DDRAM)

DDRAM 是存贮图形显示数据的。数据为 1 表示显示选择，数据为 0 表示显示非选择。DDRAM 与地址和显示位置的关系见 DDRAM 地址表（见第 6 页)。

7.Z 地址计数器

Z 地址计数器是一个 6 位计数器，此计数器具备循环记数功能，它是用于显示行扫描同步。当一行扫描完成，此地址计数器自动加 1，指向下一行扫描数据，RST 复位后 Z 地址计数器为 0。

Z 地址计数器可以用指令 DISPLAY START LINE 预置。因此，显示屏幕的起始行就由此指令控制，即 DDRAM 的数据从哪一行开始显示在屏幕的第一行。此模块的 DDRAM 共 64 行，屏幕可以循环滚动显示 64 行。

四．模块的外部接口

管脚号	管脚名称	LEVER	管脚功能描述
1	VSS	0	电源地
2	VDD	5.0V	电源电压
3	V0	6.0V∽-10V	液晶显示器驱动电压
4	D/I	H/L	D/I=“H”，表示 DB7∽DB0 为显示数据 D/I=“L”，表示 DB7∽DB0 为显示指令数据
5	R/W	H/L	R/W=“H”，E=“H”数据被读到 DB7∽DB0 R/W=“L”，E=“H→L”数据被写到 IR 或 DR
6	E	H/L	R/W=“L”，E 信号下降沿锁存 DB7∽DB0 R/W=“H”，E=“H”DDRAM 数据读到 DB7∽DB0
7	DB0	H/L	数据线
8	DB1	H/L	数据线
9	DB2	H/L	数据线
10	DB3	H/L	数据线
11	DB4	H/L	数据线
12	DB5	H/L	数据线
13	DB6	H/L	数据线
14	DB7	H/L	数据线
15	CS1	H/L	H:选择芯片(右半屏)信号

16	CS2	H/L	H:选择芯片(左半屏)信号
17	RET	H/L	复位信号,低电平复位
18	VEE	-10V	LCD 驱动负电压
19	LED+	5V	LED(+5V)或 EL 背光源
20	LED-	-	LED(0V)或 EL 背光源

五、指令说明

表 3

指令	指令码										功能
	RW	DI	D7	D6	D5	D4	D3	D2	D1	D0	
显示 ON/OFF	0	0	0	0	1	1	1	1	1	1/0	控制显示器的开关，不影响 DDRAM 中数据和内部状态
显示起始行	0	0	1	1	显示起始行（0…63）						指定显示屏从 DDRAM 中哪一行开始显示数据
设置 X 地址	0	0	1	0	1	1	1	X：0…7			设置 DDRAM 中的页地址（X 地址）
设置 Y 地址	0	0	0	1	Y 地址(0~63)						设置地址(Y 地址)
读状态	1	0	BUSY	0	ON/OFF	RST	0	0	0	0	RST 1:复位 0：正常 ON/OFF 1:显示开 0:显示关 BUSY 0：READY 1：IN OPERATION
写显示数据	0	1	显示数据								将数据线上的数据 DB7~DB0 写入 DDRAM
读显示数据	1	1	显示数据								将数据线上的数据 DB7~DB0 写入 DDRAM

1.显示开关控制(DISPLAY ON/OFF)

代码	R/W	D/I	DB7	DB6	DB5	DB4	DB3	DB2	DB1	DB0
形式	0	0	0	0	1	1	1	1	1	D

D=1:开显示(DISPLAY ON) 意即显示器可以进行各种显示操作

D=0:关显示(DISPLAY OFF) 意即不能对显示器进行各种显示操作

2.设置显示起始行(DISPLAY START LINE)

代码	R/W	D/I	DB7	DB6	DB5	DB4	DB3	DB2	DB1	DB0
形式	0	0	1	1	A5	A4	A3	A2	A1	A0

前面在 Z 地址计数器一节已经描述了显示起始行是由 Z 地址计数器控制的。

A5~A0　6 位地址自动送入 Z 地址计数器,起始行的地址可以是 0~63 的任意一行。
例如:
选择 A5~A0 是 62,则起始行与 DDRAM 行的对应关系如下：
DDRAM 行：62 63　0　1　2　3 ··················28 29
屏幕显示行： 1　2　3　 4　5　6·················· 31 32

3.设置页地址（SET PAGE “X ADDRESS”）

代码	R/W	D/I	DB7	DB6	DB5	DB4	DB3	DB2	DB1	DB0
形式	0	0	1	0	1	1	1	A2	A1	A0

所谓页地址就是 DDRAM 的行地址，8 行为一页,模块共 64 行即 8 页,A2~A0 表示 0~7 页。读写数据对地址没有影响,页地址由本指令或 RST 信号改变复位后页地址为 0。页地址与 DDRAM 的对应关系见 DDRAM 地址表。

4.设置 Y 地址(SET Y ADDRESS)

代码	R/W	D/I	DB7	DB6	DB5	DB4	DB3	DB2	DB1	DB0
形式	0	0	0	1	A5	A4	A3	A2	A1	A0

此指令的作用是将 A5~A0 送入 Y 地址计数器，作为 DDRAM 的 Y 地址指针。在对 DDRA M 进行读写操作后，Y 地址指针自动加 1,指向下一个 DDRAM 单元。

DDRAM 地址表：
表　4

	CS2=1					CS1=1					
Y=	0	1	……	62	63	0	1	……	62	63	行号
X= 0	DB0 ↓ DB7	DB0 ↓ DB7	DB0 ↓ DB7	DB0 ↓ DB7	DB0 ↓ DB7	DB0 ↓ DB7	DB0 ↓ DB7	DB0 ↓ DB7	DB0 ↓ DB7	DB0 ↓ DB7	0 ↓ 7
↓	DB0 ↓ DB7	DB0 ↓ DB7	DB0 ↓ DB7	DB0 ↓ DB7	DB0 ↓ DB7	DB0 ↓ DB7	DB0 ↓ DB7	DB0 ↓ DB7	DB0 ↓ DB7	DB0 ↓ DB7	8 ↓ 55
X=7	DB0 ↓ DB7	DB0 ↓ DB7	DB0 ↓ DB7	DB0 ↓ DB7	DB0 ↓ DB7	DB0 ↓ DB7	DB0 ↓ DB7	DB0 ↓ DB7	DB0 ↓ DB7	DB0 ↓ DB7	56 ↓ 63

5.读状态(STATUS READ)

代码	R/W	D/I	DB7	DB6	DB5	DB4	DB3	DB2	DB1	DB0
形式	0	1	BUSY	0	ON/OFF	RET	0	0	0	0

当 R/W=1　D/I=0 时,在 E 信号为“H”的作用下，状态分别输出到数据总线(DB7~DB0)的相应位。
BF:　　　前面已叙述过(见 BF 标志位一节)。
ON/OFF: 表示 DFF 触发器的状态（见 DFF 触发器一节)。
RST:　　 RST=1 表示内部正在初始化，此时组件不接受任何指令和数据。

6.写显示数据(WRITE DISPLAY DATE)

代码	R/W	D/I	DB7	DB6	DB5	DB4	DB3	DB2	DB1	DB0
形式	0	1	D7	D6	D5	D4	D3	D2	D1	D0

D7~D0 为显示数据,此指令把 D7~D0 写入相应的 DDRAM 单元,Y 地址指针自动加 1。

7.读显示数据(READ DISPLAY DATE)

代码	R/W	D/I	DB7	DB6	DB5	DB4	DB3	DB2	DB1	DB0
形式	1	1	D7	D6	D5	D4	D3	D2	D1	D0

此指令把 DDRAM 的内容 D7~D0 读到数据总线 DB7~DB0，Y 地址指针自动加 1。

Return

六、读写操作时序

1.写操作时序

图 3

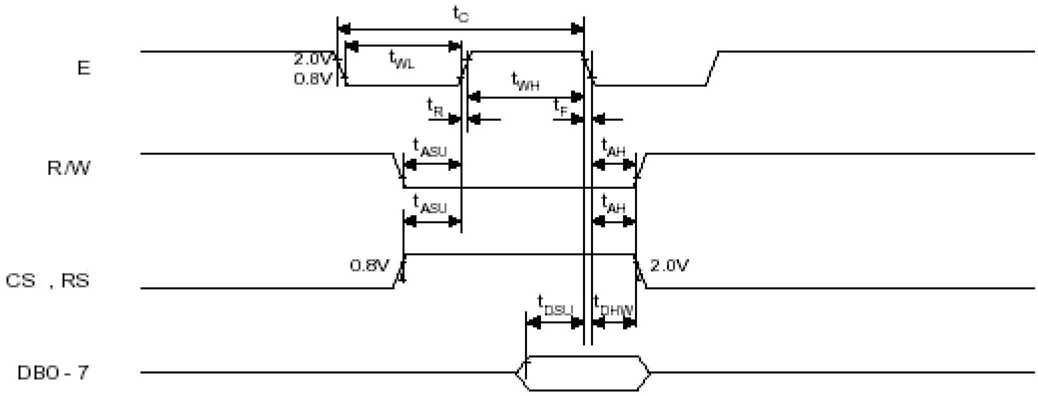

2.读操作时序

图 4

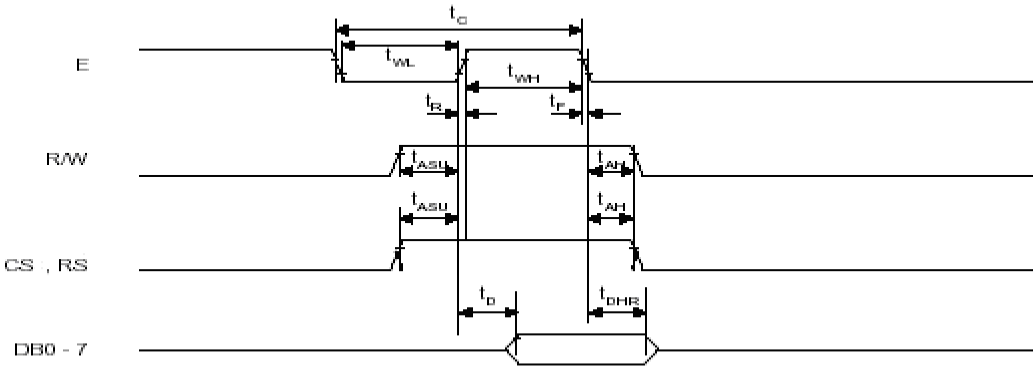

3.读写时序参数表

Characteristic	Symbol	Min	Typ	Max	Unit
E cycle	t_C	1000	-	-	ns
E high level width	t_{WH}	450	-	-	ns
E low level width	t_{WL}	450	-	-	ns
E rise time	t_R	-	-	25	ns
E fall time	t_F	-	-	25	ns
Address set-up time	t_{ASU}	140	-	-	ns
Address hold time	t_{AH}	10	-	-	ns
Data set-up time	t_{DSU}	200	-	-	ns
Data delay time	t_D	-	-	320	ns
Data hold time (write)	t_{DHW}	10	-	-	ns
Data hold time (read)	t_{DHR}	20	-	-	ns

Return

七、应用举例

CM12864-2 与单片机 8031 的一种接口如图 5.所示：

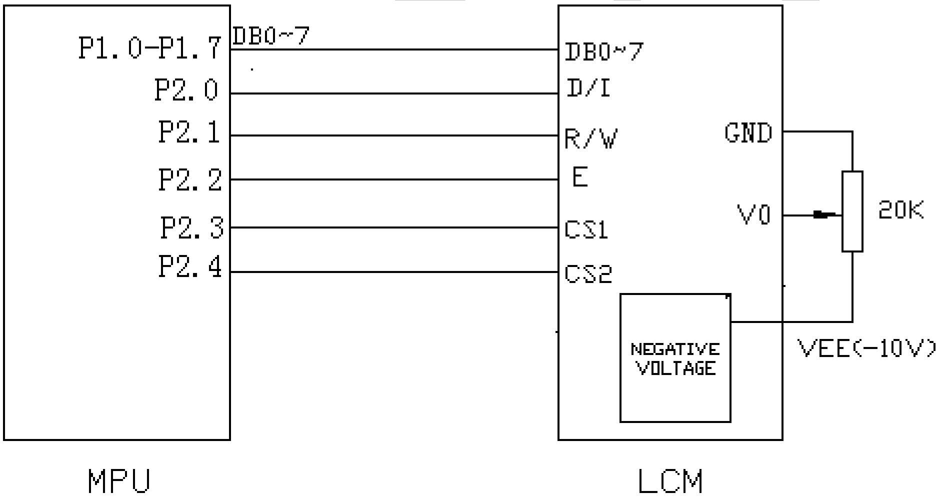


```
          ORG     0000H
          LJMP     MAIN
          ORG     0003H
          LJMP    ZHONGDUAN
          ORG     0035H
ZHONGDUAN:
          PUSH    07H
          PUSH    06H
          PUSH    05H
```

```
            SJMP   $
            POP    05H
            POP    06H
            POP    07H
            RETI


    CS1        EQU        P2.3
    CS2        EQU        P2.4
    DI         EQU        P2.0
    RW         EQU        P2.1
    E          EQU        P2.2
    DATA1      EQU        50H
    DATA2      EQU        51H
    DATA3      EQU        52H
 ;***********写左半屏命令********************
WRITE_COMMAND_L:
    SETB  CS1
    CLR   RW
    CLR   DI
    MOV   P1,DATA1
    SETB  E
    CLR   E
    CLR   CS1
    RET

 ;***********写左半屏数据********************
WRITE_DATA_L:
    SETB  CS1
    CLR   RW
    SETB  DI
    MOV   P1,DATA2
    SETB  E
    CLR   E
    CLR   CS1
    RET
 ;***********写右半屏命令********************
WRITE_COMMAND_R:
    SETB  CS2
    CLR   RW
    CLR   DI
    MOV   P1,DATA1
```

CRYSTAL

```
    SETB  E
    CLR   E
    CLR   CS2
    RET

 ;***********写右半屏数据********************
WRITE_DATA_R:
    SETB  CS2
    CLR   RW
    SETB  DI
    MOV   P1,DATA2
    SETB  E
    CLR   E
    CLR   CS2
    RET
 ;**********延时程序*******************
     MS40:    MOV    R7,#0E8H
     MS2:     MOV    R6,#0FFH
     MS1:     DJNZ   R6,MS1
              DJNZ   R7,MS2
              RET
     DELAY:   MOV    R5,#07H
     DELAY1:  LCALL   MS40
              DJNZ   R5,DELAY1
              RET
 ;*************************************


 MAIN:
         MOV       P2,#00H
         MOV       SP,#60H
         SETB    EA
         SETB    EX0
         SETB    IT0
         MOV   P3,#0FFH
         CLR     P3.0

         MOV       DATA1,#3EH
         LCALL     WRITE_COMMAND_L
         LCALL     WRITE_COMMAND_R
         MOV       DATA1,#3FH
```

```
        LCALL   WRITE_COMMAND_L
        LCALL   WRITE_COMMAND_R
        MOV     DATA1,#0C0H
        LCALL   WRITE_COMMAND_L
        LCALL   WRITE_COMMAND_R
        MOV     DATA1,#0B8H    ;PAGE ADDRESS
        LCALL   WRITE_COMMAND_L
        LCALL   WRITE_COMMAND_R
        MOV     DATA1,#40H     ;Y   ADDRESS
        LCALL   WRITE_COMMAND_L
        LCALL   WRITE_COMMAND_R
        MOV     R1,#8
        MOV     DATA3,#0B8H
        MOV     DATA1,DATA3
M21:    MOV     DATA1,DATA3
        LCALL   WRITE_COMMAND_L
        LCALL   WRITE_COMMAND_R
        MOV     DATA1,#40H
        LCALL   WRITE_COMMAND_L
        LCALL   WRITE_COMMAND_R
        MOV     R2,#64
L21:    MOV     DATA2,#0AAH
        LCALL   WRITE_DATA_L
        LCALL   WRITE_DATA_R
        DJNZ    R2,L21
        INC     DATA3
        DJNZ    R1,M21
        LCALL   DELAY

        MOV     R1,#8
        MOV     DATA3,#0B8H
        MOV     DATA1,DATA3
M22:    MOV     DATA1,DATA3
        LCALL   WRITE_COMMAND_L
        LCALL   WRITE_COMMAND_R
        MOV     DATA1,#40H
        LCALL   WRITE_COMMAND_L
        LCALL   WRITE_COMMAND_R
        MOV     R2,#64
L22:    MOV     DATA2,#55H
        LCALL   WRITE_DATA_L
        LCALL   WRITE_DATA_R
```

```
        DJNZ    R2,L22
        INC     DATA3
        DJNZ    R1,M22
        LCALL   DELAY

        MOV     R1,#8
        MOV     DATA3,#0B8H
        MOV     DATA1,DATA3
M23:    MOV     DATA1,DATA3
        LCALL   WRITE_COMMAND_L
        LCALL   WRITE_COMMAND_R
        MOV     DATA1,#40H
        LCALL   WRITE_COMMAND_L
        LCALL   WRITE_COMMAND_R
        MOV     R2,#32
L23:    MOV     DATA2,#0FFH
        LCALL   WRITE_DATA_L
        LCALL   WRITE_DATA_R
        MOV     DATA2,#00H
        LCALL   WRITE_DATA_L
        LCALL   WRITE_DATA_R
        DJNZ    R2,L23
        INC     DATA3
        DJNZ    R1,M23
        LCALL   DELAY

        MOV     R1,#8
        MOV     DATA3,#0B8H
        MOV     DATA1,DATA3
M24:    MOV     DATA1,DATA3
        LCALL   WRITE_COMMAND_L
        LCALL   WRITE_COMMAND_R
        MOV     DATA1,#40H
        LCALL   WRITE_COMMAND_L
        LCALL   WRITE_COMMAND_R
        MOV     R2,#32
L24:    MOV     DATA2,#00H
        LCALL   WRITE_DATA_L
        LCALL   WRITE_DATA_R
        MOV     DATA2,#0FFH
        LCALL   WRITE_DATA_L
        LCALL   WRITE_DATA_R
```

CRYSTAL

```
        DJNZ    R2,L24
        INC     DATA3
        DJNZ    R1,M24
        LCALL   DELAY

        MOV     R1,#8
        MOV     DATA3,#0B8H
        MOV     DATA1,DATA3
M25:    MOV     DATA1,DATA3
        LCALL   WRITE_COMMAND_L
        LCALL   WRITE_COMMAND_R
        MOV     DATA1,#40H
        LCALL   WRITE_COMMAND_L
        LCALL   WRITE_COMMAND_R
        MOV     R2,#32
L25:    MOV     DATA2,#0AAH
        LCALL   WRITE_DATA_L
        LCALL   WRITE_DATA_R
        MOV     DATA2,#55H
        LCALL   WRITE_DATA_L
        LCALL   WRITE_DATA_R
        DJNZ    R2,L25
        INC     DATA3
        DJNZ    R1,M25
        LCALL   DELAY

        MOV     R1,#8
        MOV     DATA3,#0B8H
        MOV     DATA1,DATA3
M26:    MOV     DATA1,DATA3
        LCALL   WRITE_COMMAND_L
        LCALL   WRITE_COMMAND_R
        MOV     DATA1,#40H
        LCALL   WRITE_COMMAND_L
        LCALL   WRITE_COMMAND_R
        MOV     R2,#32
L26:    MOV     DATA2,#55H
        LCALL   WRITE_DATA_L
        LCALL   WRITE_DATA_R
        MOV     DATA2,#0AAH
        LCALL   WRITE_DATA_L
        LCALL   WRITE_DATA_R
```

CRYSTAL

```
        DJNZ    R2,L26
        INC     DATA3
        DJNZ    R1,M26
        LCALL   DELAY

        MOV     DPTR,#CHINESE1
        MOV     R1,#8
        MOV     DATA3,#0B8H
        MOV     DATA1,DATA3
M27:    MOV     DATA1,DATA3
        LCALL   WRITE_COMMAND_L
        MOV     DATA1,#40H
        LCALL   WRITE_COMMAND_L
        MOV     R2,#64
L27:
        CLR     A
        MOVC    A,@A+DPTR
        MOV     DATA2,A
        LCALL   WRITE_DATA_L
        INC     DPTR
        DJNZ    R2,L27
        INC     DATA3
        DJNZ    R1,M27

        MOV     DPTR,#CHINESE2
        MOV     R1,#8
        MOV     DATA3,#0B8H
        MOV     DATA1,DATA3
M28:    MOV     DATA1,DATA3
        LCALL   WRITE_COMMAND_R
        MOV     DATA1,#40H
        LCALL   WRITE_COMMAND_R
        MOV     R2,#64
L28:
        CLR     A
        MOVC    A,@A+DPTR
        MOV     DATA2,A
        LCALL   WRITE_DATA_R
        INC     DPTR
        DJNZ    R2,L28
        INC     DATA3
        DJNZ    R1,M28
```

CRYSTAL

```
            LCALL    DELAY
            LJMP     MAIN

  CHINESE1:
DB
0FFH,0FFH,003H,023H,0A3H,023H,063H,0B3H,013H,013H,0D3H,083H,003H,003H
,083H,063H
DB
043H,003H,003H,003H,003H,003H,0E3H,0A3H,0A3H,0A3H,0A3H,0A3H,0A3H,0E3H
,003H,003H
DB
003H,003H,003H,023H,023H,023H,0E3H,013H,013H,003H,023H,0C3H,003H,003H
,0F3H,003H
DB
003H,003H,083H,083H,083H,0F3H,083H,083H,003H,083H,083H,083H,0F3H,083H
,083H,083H
DB
0FFH,0FFH,000H,008H,008H,08BH,068H,0FDH,02AH,049H,088H,088H,002H,021H
,010H,088H
DB
076H,024H,000H,0F0H,050H,050H,057H,052H,0F2H,002H,002H,0F2H,052H,057H
,050H,050H
DB
0F0H,000H,041H,021H,019H,007H,0FFH,005H,049H,040H,042H,02CH,020H,020H
,0FFH,010H
DB
010H,000H,010H,010H,008H,0FFH,004H,002H,000H,00CH,034H,0C4H,0C7H,024H
,01CH,004H
DB
0FFH,0FFH,000H,002H,001H,000H,000H,00FH,000H,000H,005H,004H,002H,002H
,001H,000H
DB
000H,000H,000H,007H,002H,002H,002H,002H,007H,000H,000H,007H,002H,002H
,002H,002H
DB
007H,000H,000H,000H,000H,000H,00FH,000H,000H,000H,000H,000H,000H,000H
,00FH,000H
DB
000H,000H,000H,004H,008H,007H,000H,004H,004H,002H,001H,000H,000H,001H
,002H,006H
DB
0FFH,0FFH,000H,082H,08AH,0B2H,086H,0DBH,0A1H,091H,08DH,088H,020H,010H
```

```
,008H,086H
DB
064H,040H,000H,000H,000H,000H,07EH,02AH,02AH,02AH,02AH,02AH,02AH,07EH
,000H,000H
DB
000H,000H,010H,012H,092H,072H,0FEH,051H,091H,000H,022H,0CCH,000H,000H
,0FFH,000H
DB
000H,000H,008H,008H,088H,0FFH,048H,028H,000H,0C8H,048H,048H,07FH,048H
,0C8H,048H
DB
0FFH,0FFH,000H,020H,010H,008H,006H,0FFH,002H,004H,058H,048H,020H,022H
,011H,008H
DB
007H,002H,000H,07FH,025H,025H,025H,025H,07FH,000H,000H,07FH,025H,025H
,025H,025H
DB
07FH,000H,004H,002H,001H,000H,0FFH,000H,004H,004H,004H,002H,002H,002H
,0FFH,001H
DB
001H,000H,001H,041H,080H,07FH,000H,040H,040H,020H,013H,00CH,00CH,012H
,021H,060H
DB
0FFH,0FFH,000H,010H,050H,090H,030H,0D8H,008H,088H,068H,040H,000H,080H
,040H,030H
DB
020H,000H,000H,000H,000H,000H,0F0H,050H,050H,050H,050H,050H,050H,0F0H
,000H,000H
DB
000H,000H,080H,090H,090H,090H,0F0H,088H,088H,000H,010H,060H,000H,000H
,0F8H,000H
DB
000H,000H,040H,040H,040H,0F8H,040H,040H,000H,040H,040H,040H,0F8H,040H
,040H,040H
DB
0FFH,0FFH,000H,004H,084H,045H,034H,0FEH,015H,024H,0C4H,044H,001H,010H
,088H,044H
DB
03BH,012H,000H,0F8H,028H,028H,02BH,029H,0F9H,001H,001H,0F9H,029H,02BH
,028H,028H
DB
0F8H,000H,020H,010H,00CH,003H,0FFH,002H,024H,020H,021H,016H,010H,010H
```

```
,0FFH,008H
DB
008H,000H,008H,008H,004H,0FFH,002H,001H,000H,006H,09AH,062H,063H,092H
,00EH,002H
DB
0FFH,0FFH,0C0H,0C1H,0C0H,0C0H,0C0H,0C7H,0C0H,0C0H,0C2H,0C2H,0C1H,0C1H
,0C0H,0C0H
DB
0C0H,0C0H,0C0H,0C3H,0C1H,0C1H,0C1H,0C1H,0C3H,0C0H,0C0H,0C3H,0C1H,0C1H
,0C1H,0C1H
DB
0C3H,0C0H,0C0H,0C0H,0C0H,0C0H,0C7H,0C0H,0C0H,0C0H,0C0H,0C0H,0C0H,0C0H
,0C7H,0C0H
DB
0C0H,0C0H,0C0H,0C2H,0C4H,0C3H,0C0H,0C2H,0C2H,0C1H,0C0H,0C0H,0C0H,0C0H
,0C1H,0C3H

CHINESE2:
DB
083H,003H,043H,043H,043H,043H,043H,0C3H,073H,043H,043H,043H,043H,043H
,043H,043H
DB
003H,0E3H,023H,023H,0E3H,023H,003H,0E3H,0A3H,0A3H,0A3H,0A3H,0A3H,0E3H
,003H,003H
DB
003H,003H,003H,003H,003H,0E3H,043H,003H,003H,0E3H,003H,003H,003H,003H
,003H,003H
DB
003H,023H,023H,023H,023H,023H,023H,023H,023H,023H,023H,023H,0E3H,003H
,0FFH,0FFH
DB
000H,020H,010H,008H,004H,0FEH,093H,092H,092H,092H,092H,092H,0FEH,000H
,000H,000H
DB
000H,0FFH,000H,023H,044H,038H,000H,0FFH,004H,00CH,034H,0C4H,024H,017H
,000H,000H
DB
000H,010H,008H,004H,083H,040H,038H,010H,000H,000H,041H,086H,00CH,018H
,008H,000H
DB
001H,0F9H,049H,049H,049H,049H,049H,049H,0F9H,001H,000H,000H,0FFH,000H
,0FFH,0FFH
```

```
DB
002H,000H,000H,000H,000H,00FH,000H,000H,000H,002H,004H,00CH,007H,000H
,000H,000H
DB
000H,00FH,000H,000H,000H,000H,000H,00FH,004H,002H,000H,000H,001H,002H
,006H,002H
DB
000H,000H,002H,007H,002H,002H,002H,003H,001H,001H,001H,007H,003H,000H
,000H,000H
DB
000H,001H,000H,000H,000H,000H,000H,000H,000H,000H,002H,004H,003H,000H
,0FFH,0FFH
DB
008H,000H,004H,084H,044H,0E4H,034H,02CH,027H,024H,024H,024H,0E4H,004H
,004H,004H
DB
000H,0FEH,002H,032H,04EH,082H,000H,0FEH,04AH,0CAH,04AH,04AH,04AH,07EH
,000H,000H
DB
000H,000H,080H,040H,030H,00EH,084H,000H,000H,00EH,010H,060H,0C0H,080H
,080H,000H
DB
010H,092H,092H,092H,092H,092H,092H,092H,092H,012H,002H,002H,0FEH,000H
,0FFH,0FFH
DB
020H,002H,001H,000H,000H,0FFH,009H,009H,009H,029H,049H,0C9H,07FH,000H
,000H,000H
DB
000H,0FFH,000H,002H,004H,003H,000H,0FFH,040H,020H,003H,00CH,012H,021H
,060H,020H
DB
000H,001H,020H,070H,028H,024H,023H,031H,010H,010H,014H,078H,030H,001H
,000H,000H
DB
000H,01FH,004H,004H,004H,004H,004H,004H,00FH,000H,020H,040H,03FH,000H
,0FFH,0FFH
DB
040H,000H,020H,020H,020H,020H,0A0H,060H,038H,020H,020H,020H,020H,020H
,020H,020H
DB
000H,0F0H,010H,090H,070H,010H,000H,0F0H,050H,050H,050H,050H,050H,0F0H
,000H,000H
```

```
DB
000H,000H,000H,000H,080H,070H,020H,000H,000H,070H,080H,000H,000H,000H
,000H,000H
DB
080H,090H,090H,090H,090H,090H,090H,090H,090H,090H,010H,010H,0F0H,000H
,0FFH,0FFH
DB
000H,010H,008H,004H,002H,0FFH,049H,049H,049H,049H,049H,049H,0FFH,000H
,000H,000H
DB
000H,0FFH,000H,011H,022H,01CH,000H,0FFH,002H,006H,01AH,062H,092H,00BH
,000H,000H
DB
000H,008H,004H,082H,041H,020H,01CH,088H,080H,080H,0A0H,0C3H,086H,00CH
,004H,000H
DB
000H,0FCH,024H,024H,024H,024H,024H,024H,07CH,000H,000H,000H,0FFH,000H
,0FFH,0FFH
DB
0C1H,0C0H,0C0H,0C0H,0C0H,0C7H,0C0H,0C0H,0C0H,0C1H,0C2H,0C6H,0C3H,0C0H
,0C0H,0C0H
DB
0C0H,0C7H,0C0H,0C0H,0C0H,0C0H,0C0H,0C7H,0C2H,0C1H,0C0H,0C0H,0C0H,0C1H
,0C3H,0C1H
DB
0C0H,0C0H,0C1H,0C3H,0C1H,0C1H,0C1H,0C1H,0C0H,0C0H,0C0H,0C3H,0C1H,0C0H
,0C0H,0C0H
DB
0C0H,0C0H,0C0H,0C0H,0C0H,0C0H,0C0H,0C0H,0C0H,0C0H,0C1H,0C2H,0C1H,0C0H
,0FFH,0FFH


           END
```